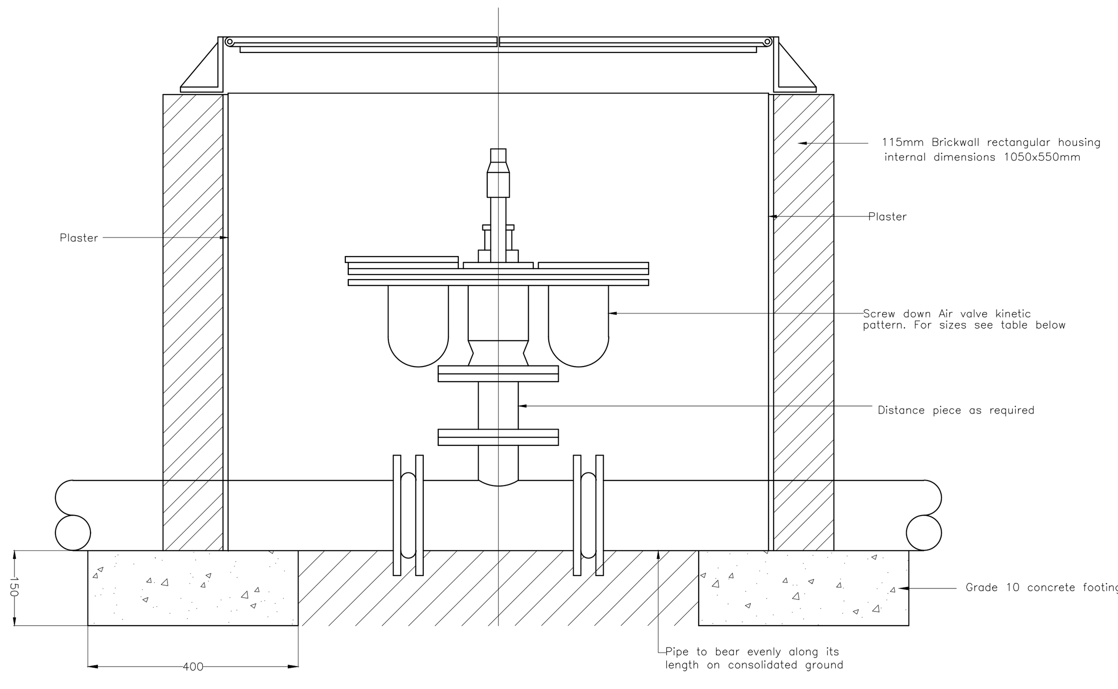

TYPICAL AIR VALVE ASSEMBLY

SIZE OF MAIN	SIZE AND TYPE OF AIR VALVE
Up to 300mm	25mm single ball orifices
300mm to 450mm	75mm Double
525mm and over	100mm Double

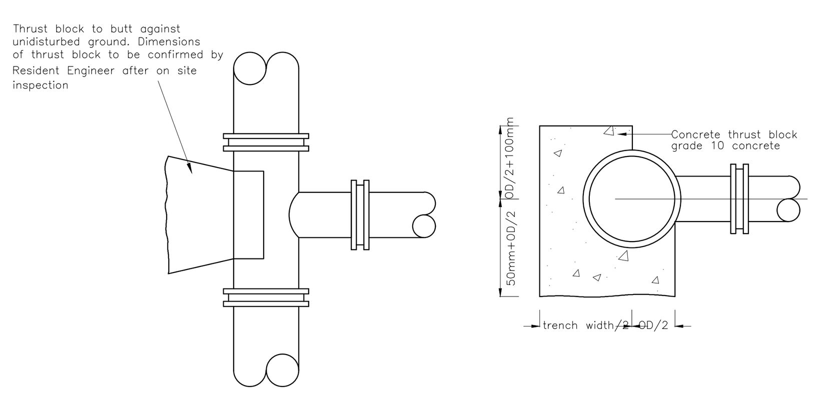

TYPICAL THRUST BLOCK AT TEE JUNCTION

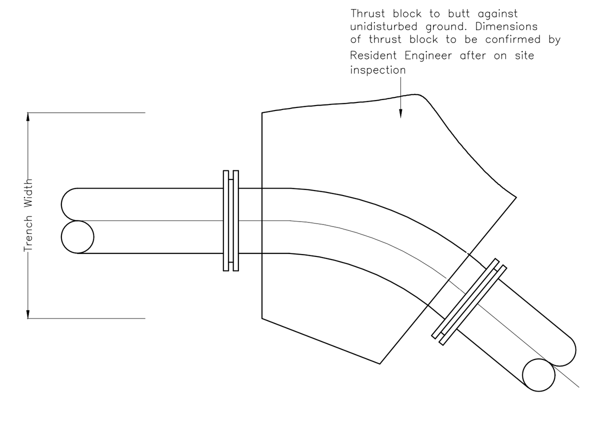

TYPICAL THRUST BLOCK ON BENDS

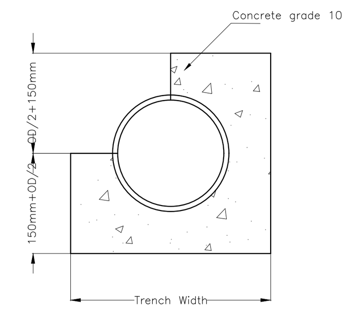

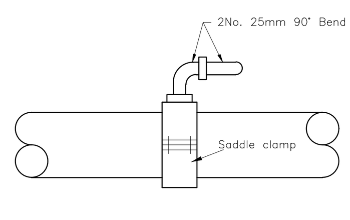

Elevation

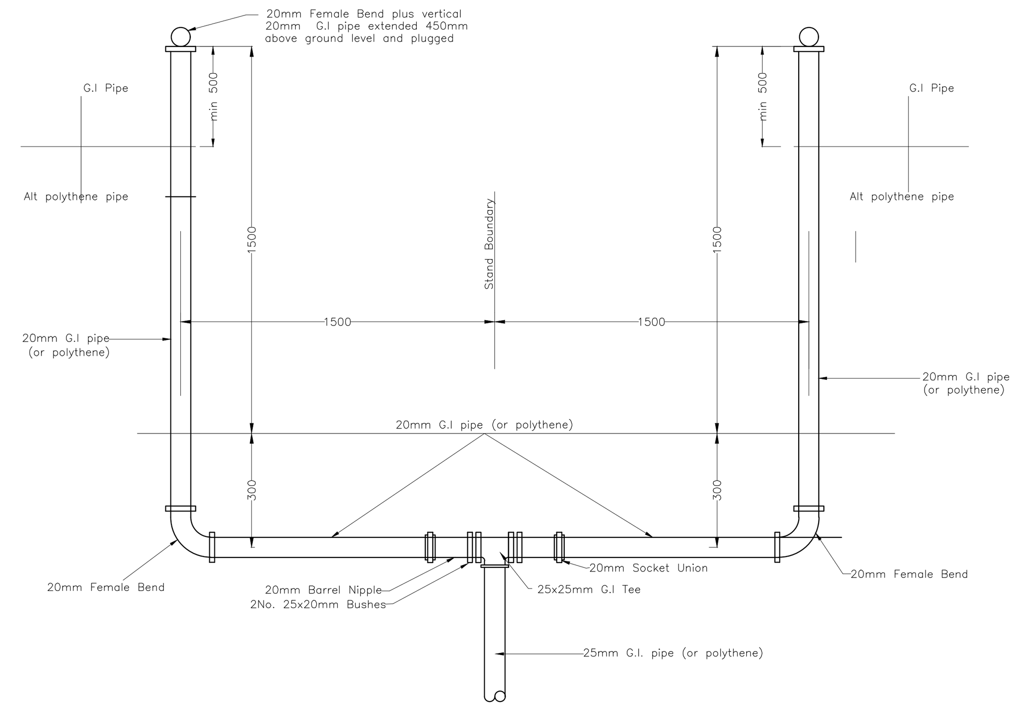

DETAILS OF DOUBLE STAND CONNECTION

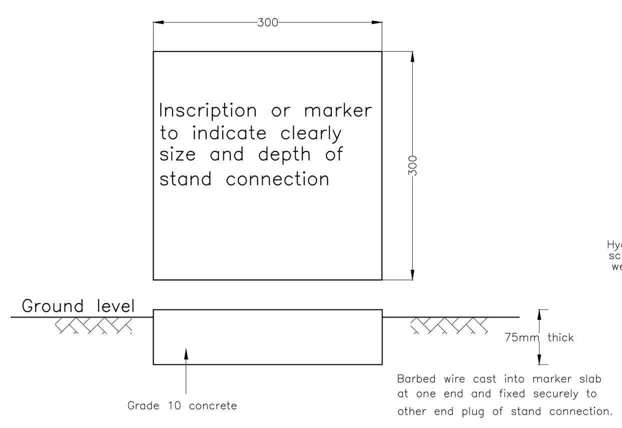

Stand Connection Markers

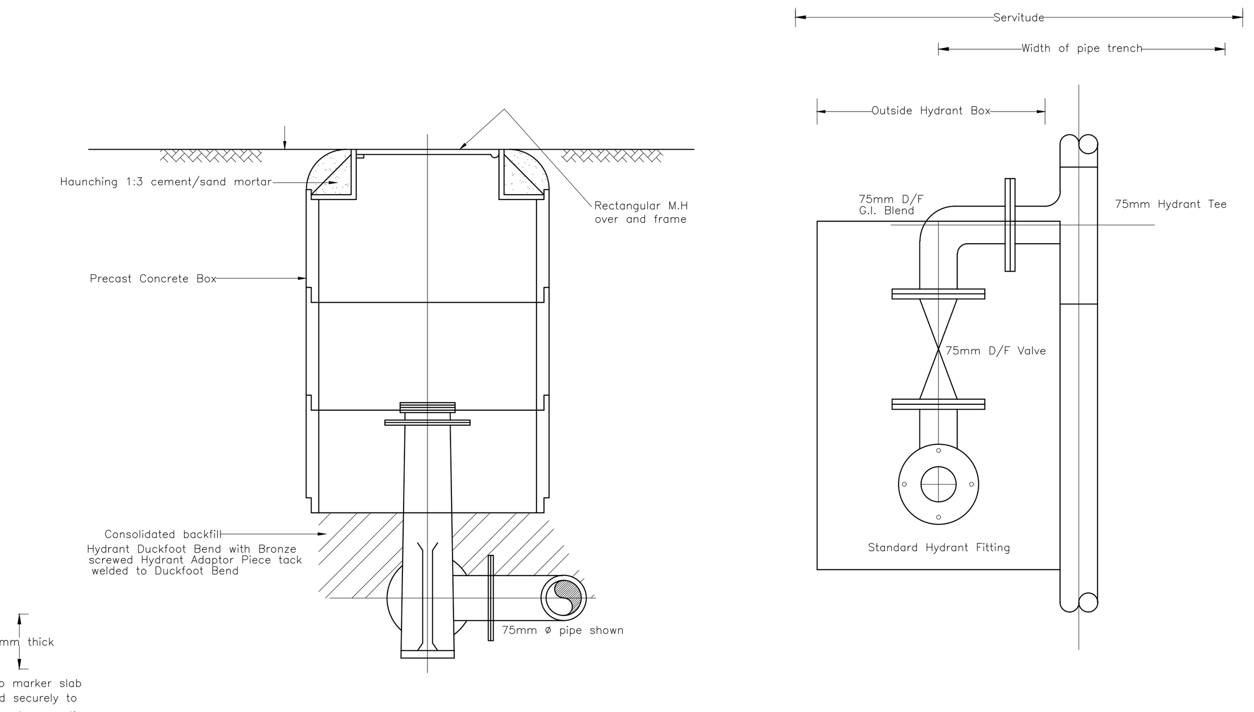

DETAILS OF FIRE HYDRANT INSTALLATION

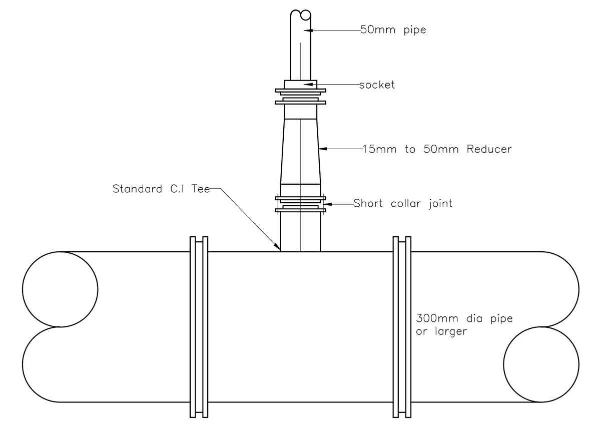

DETAILS OF LARGER CONNECTION

NOTES: To be used in industrial sites on all connections crossing Road Reserve

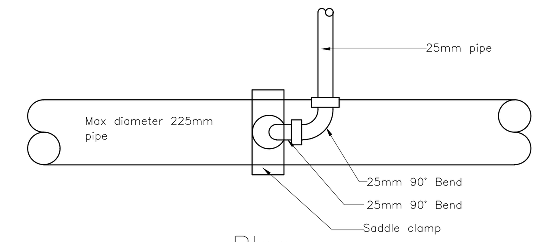

Plan

DETAILS OF CONNECTIONS AT WATER MAIN

NOTES:
1. Where water main is not under pressure use above detail for pipe sizes up to 225mm diameter
2. Where water main is under pressure Talbot ferrule must be used in conjuction with the two 90° bends

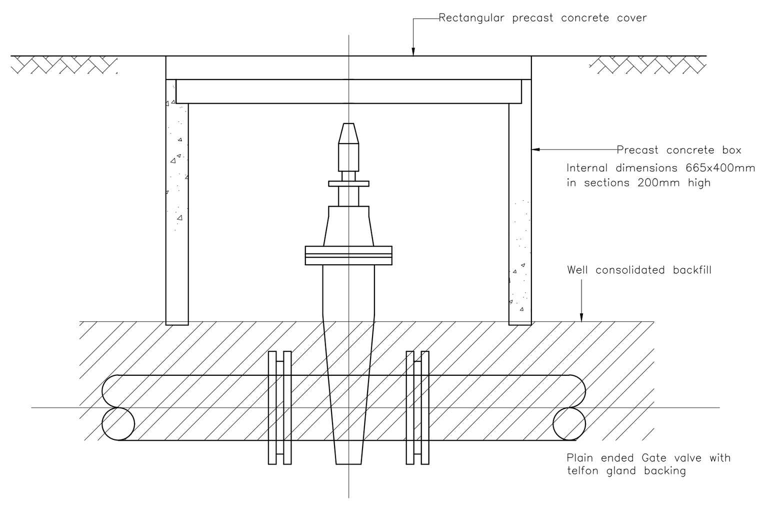

GATE VALVE CONNECTION AND BOX

(Mains up to 300mm)

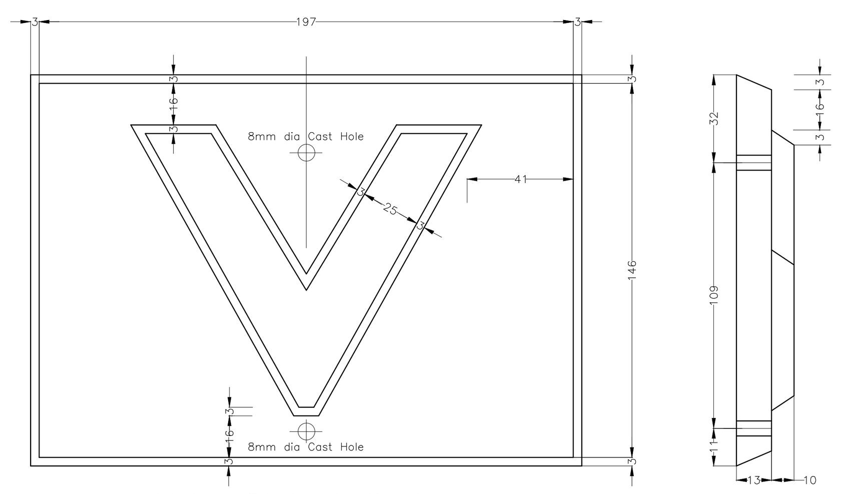

Valve Plate Indicator

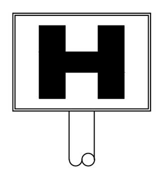

Fire Hydrant

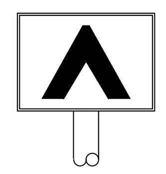

Air Valve

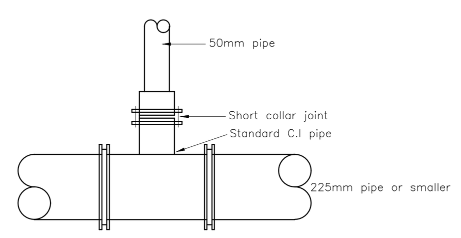

DETAILS OF LARGER CONNECTION

NOTES: To be used in industrial sites on all connections crossing Road Reserve

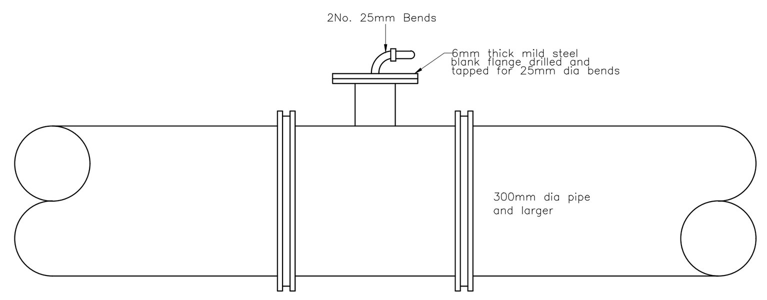

DETAILS OF CONNECTIONS TO WATER MAIN

NOTES:
1. To be used where A.C water main is 300mm diameter or larger
2. Maximum size of connection to be 50mm G.I If connection is larger use standard Tees and Reducers.

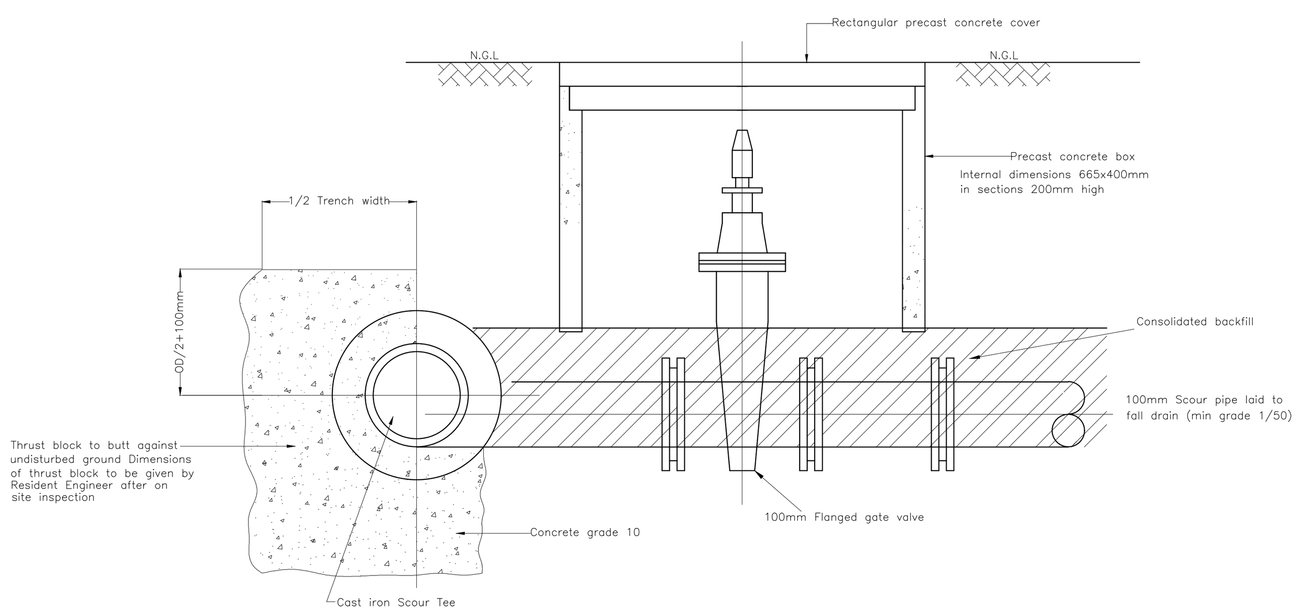

SCOUR VALVE INSTALLATION

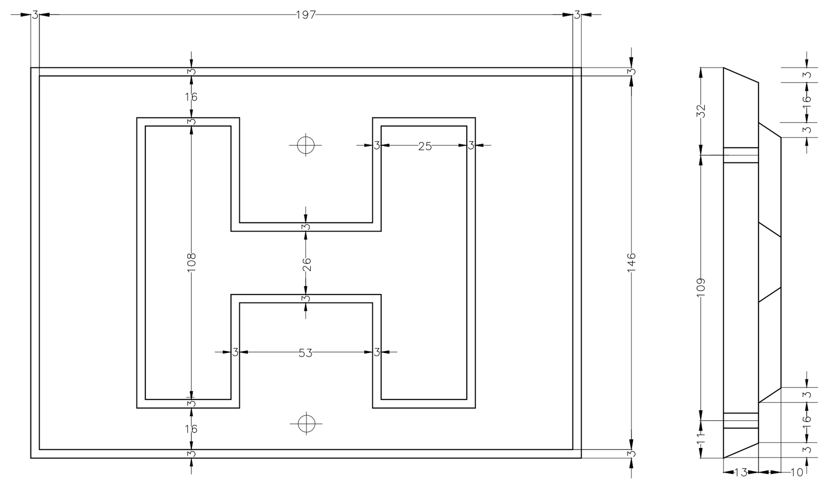

Hydrant Plate Indicator (Half Full Size)

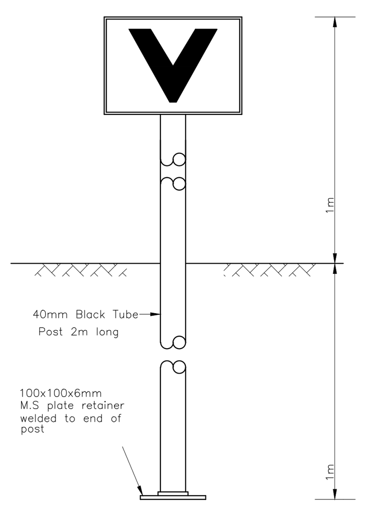

Gate Valve

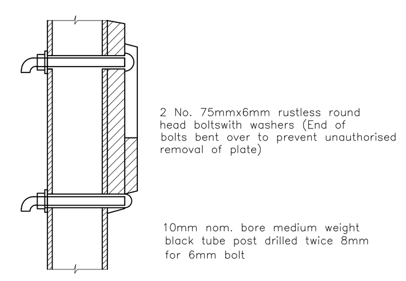

Detail at Head of Post

(1/4 Full size)

NOTES:

1. Marker plates to CITY OF HARARE STANDARDS
2. The plates shall be thoroughly cleaned, primed with a zinc based primer and painted two coats black enamel gloss for the figures and two coats yellow reflective paint for the background Posts shall be similarly painted yellow.
3. Marker posts shall not be concreted into the ground unless for any reason (e.g rock) the base of the post is less than 600mm below ground level when 0.03 cu m of concrete shall be placed around the pipe above the level of the retainer plate.
4. Where a zone valve is used its position shall be indicated by a ZV marker plate. The surface box shall be circular and the 600mm square concrete slab shall be painted yellow.

DETAILS OF MARKER PLATES AND POSTS

NOTES

GENERAL

1. All construction and erection done on site should conform to the laid standards of construction
2. The Engineer and/or client reserves the right to instruct the contractor to correct defective work(s)
3. This drawing is to be read in conjunction with all 100 series drawings

WATER RETICULATIONS

1. PIPES TO BE uPVC CLASS 12 TO SABS 966 PRESSURE PIPES WITH APPROVED SPIGOT AND SOCKET JOINTS TO DIAMETERS SHOWN.
2. ALL BEDDING TO PIPES TO BE TOTAL GRANULAR SURROUND FOR FLEXIBLE PIPES TO SABS 1200 SERIES.
3. MINIMUM COVER TO PIPES TO BE:
i) IN SERVITUDE 900mm MINIMUM.
ii) IN ROAD RESERVES OR UNDER ROADS 1250mm MINIMUM.
4. BENDS TO BE uPVC PRESSURE BENDS UNLESS NOTED.
5. ALL FITTINGS TO BE C.I. ADAPTABLE FOR uPVC PIPES.
6. VALVES TO BE C.I. – WATERWORKS CLASS 16 TO SABS 664 AND SOCKET ENDED FOR uPVC PIPES UP TO 200mm DIA. FLANGED FOR 200mm DIA AND OVER. – CLOSING TO BE CLOCKWISE.
7. AT ALL BENDS GREATER THAN 11.25° THRUST BLOCKS ARE TO BE PROVIDED INCLUDING AT VALVES, TEES STOP ENDS ETC DIMENSIONED ON STANDARD DRAWINGS.
8. ALL VALVES AND HYDRANTS LOCATED IN ROAD TO BE 1m FROM FRONT OF KERB WITH RELEVANT MARKER POST

REFERENCE DRAWINGS

	Drg No.	Title
1	S.G/A1040/C/P/D001	POTABLE WATER RETICULATION
2	S.G/A1040/C/P/D002	POTABLE WATER RETICULATION SHEETS 1 TO 5

KEY

MAINS

POTABLE WATER MAIN
FIR FIGHTING WATER MAIN
FH FIRE HYDRANT
END CAP/ STOP END WITH THRUST BLOCK
REDUCER SV REDUCER/ STOP VALVE

	DRWN	REV BY	CHKD	APPD	ISSUE	COMMENT
OCT 2018	S.M	F.M	G.K	S.M	S.M	Preliminary Design
NOV 2018	S.M	F.M	G.K	S.M	S.M	Detailed Design

SG MUSONI Consulting Engineers
23 Castern Ave
Belvedere, Harare
Cell:0775004369
email:stmuta@aol.com
Website:sgmusoni.com

ZIMBABWE ASSOCIATION ZACE CONSULTING ENGINEERS
No 1 Conquenar House
256 Samora Machel
Avenue Eastlea PO Box
HG 836 Highlands Harare
Zimbabwe TelephonelFax
(263 4) 746010 e-mail:
zaceass@gmail.com
Belvedere, Harare

ECZ
Suite Y103 - Y106
National Sports Stadium,
Bays 24 - 27
Samora Machel Avenue,
Belvedere
P. O. Box 660
Harare

THIS DRAWING IS ISSUED BY SG MUSONI, SUBJECT TO THE CONDITIONS THAT IT IS NOT COPIED EITHER IN WHOLE OR IN PART OR DISCLOSED TO THIRD PARTIES UNLESS PRIOR WRITTEN AUTHORISATION IS GIVEN BY SG MUSONI.

PREVIOUS VERSIONS OF THIS DRAWING SHOULD BE STAMPED SUPERSEDED OR DESTROYED
DO NOT SCALE THIS DRAWING – IF IN DOUBT ASK

PROJECT TITLE

DESIGN OF CIVIL INFRASTRUCTURE FOR STRATHMORE HOUSING DEVELOPMENT

DRAWING TITLE

WATER STANDARD DETAILS
VALVES & FITTINGS (P)

CLIENT

HOMELINK (PVT) LTD
Hardwicke House, 72-74
Samora Machel Ave, P.O.
Box 628, Causeway,
HARARE, ZIMBABWE

NTS	MASTER SIZE A1
CLIENT DRAWING No. S.G/A1040/C/P/D003	REV A1